DTE/DCE and CSU/DSU device, NAT, DHCP, ARP, SMTP, WWW, HTTP, FTP

Gateway, firewall, VPN, DSL, VLAN, DNS, ICMP

Data Communication and Networking

DTE/ DCE

Data Terminal Equipment (DTE):- It is an end instrument that converts user info^n into signals or reconvert the received signals.

↳ DTE communicates with DCE.

↳ DTE is the terminal (computer)

↳ DTE is the device where comm^n line ends.

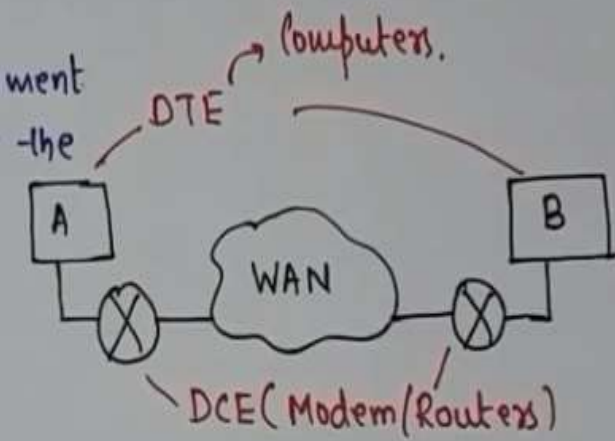

Data Communication Equipment (DCE):- Also called as Data circuit-terminating equipment and it sits b/w the DTE and Data transmission circuit.

↳ DCE is usually a modem.

↳ Perform func^n such as signal conversion, coding etc.

↳ DCE provides path for comm^n.

Internet Standards:-

- Mechanical (Wiring, Connector) (RS232) — Male DB25, Female DB25
- Electrical — NRZ, BRZ, Polar — Signal Coding.
- Functional (Protocols)

CSU (channel service unit)/DSU(data service unit)

A Channel Service Unit/Data Service Unit is a device that seats at the provider's client site used to connect the digital WAN line (Leased lines) to the client's DTE device which is usually a router.
A modem connects an analog line (phone line) to a digital device (the computer) and a CSU/DSU connects a digital line to a digital device.

The DTE would be the router and the DCE (providing clock) would be the CSU/DSU, like this:

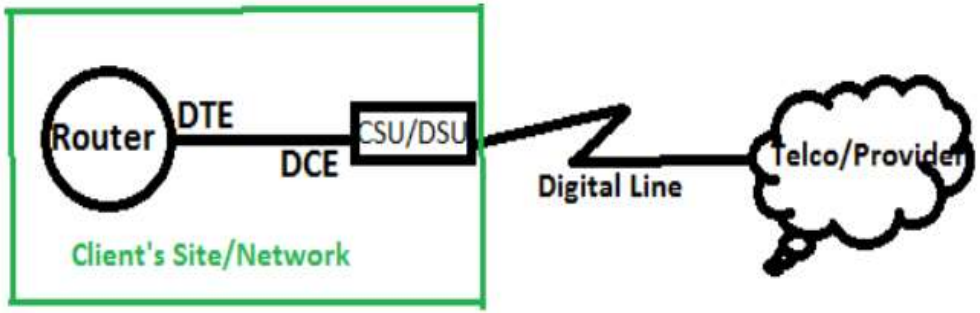

Serial communication requires clocking, and DCE is used as a generic term to label the side of the link that provides the clocking signal, and in a CSU/DSU, the side that provides this signal is the DSU. DSU is the "part" of the CSU/DSU that handles (connects) the connection to the DTE (the router). So, if you want to be specific about it, you could say that the DSU part of the CSU/DSU is the DCE.

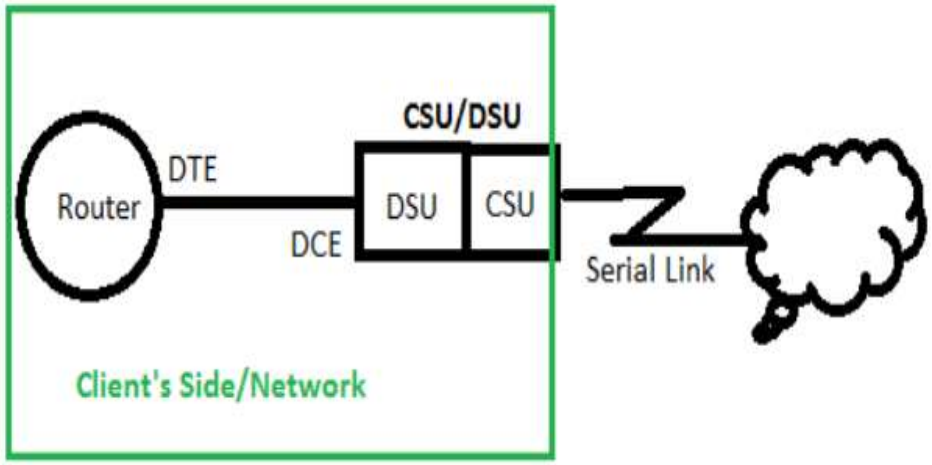

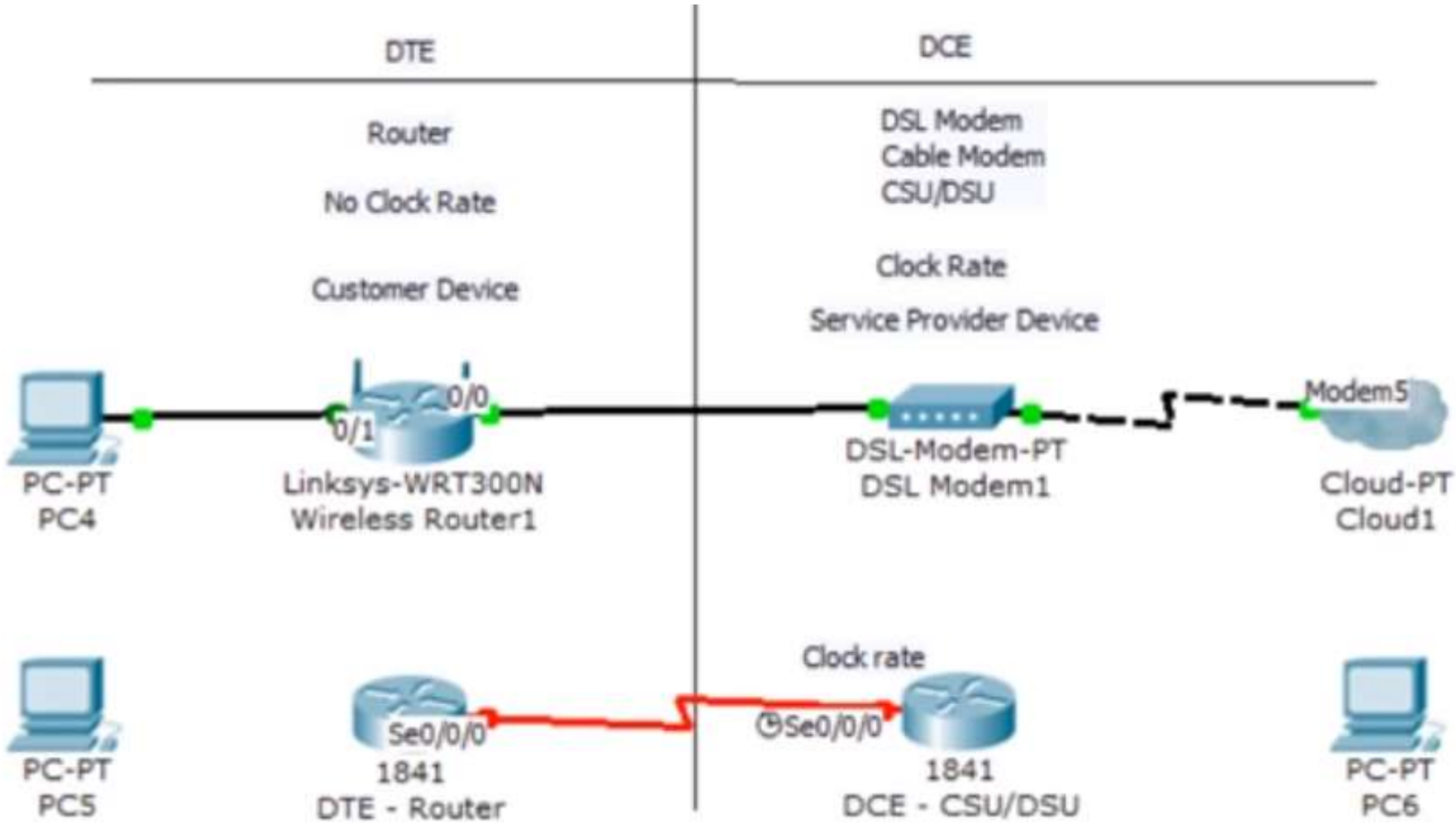
DTE
DCE
Router
No Clock Rate
Customer Device
DSL Modem
Cable Modem
CSU/DSU
Clock Rate
Service Provider Device
0/0
0/1
PC-PT
PC4
Linksys-WRT300N
Wireless Router1
DSL-Modem-PT
DSL Modem1
Modem5
Cloud-PT
Cloud1
Clock rate
Se0/0/0
Se0/0/0
PC-PT
PC5
1841
DTE - Router
1841
DCE - CSU/DSU
PC-PT
PC6

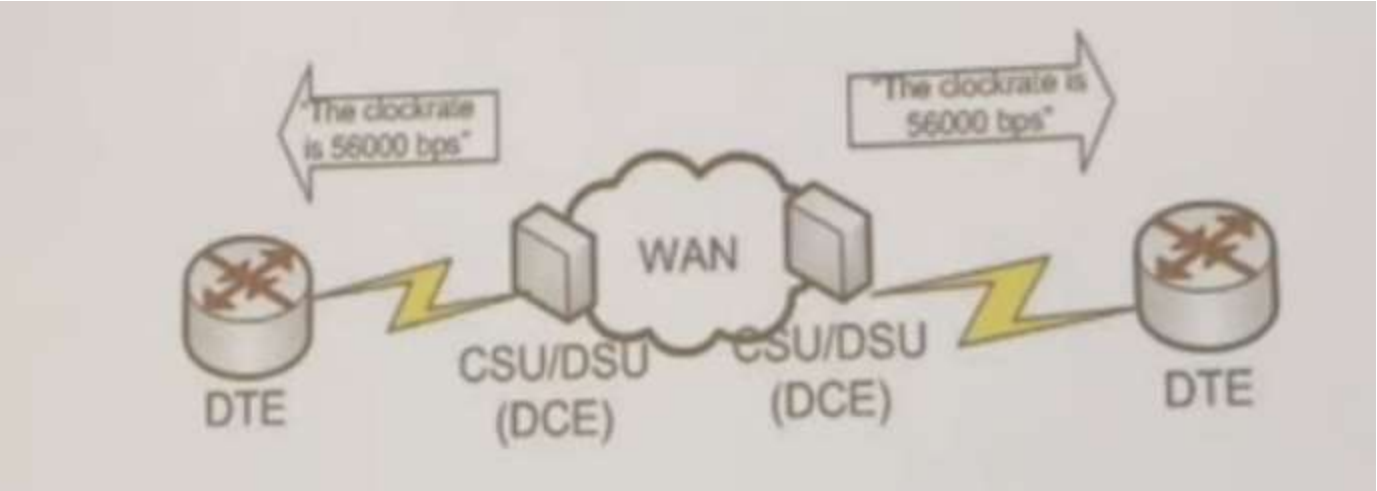
"The clockrate is 56000 bps"
"The clockrate is 56000 bps"
WAN
DTE
CSU/DSU (DCE)
CSU/DSU (DCE)
DTE

Network Address Translation (NAT)

With the increasing number of internet users requiring an unique IP address for each host, there is an acute shortage of IP addresses (until everybody moves to IPV6). The *Network Address Translation* (NAT) approach is a quick interim solution to this problem. NAT allows a large set of IP addresses to be used in an internal (private) network and a handful of addresses to be used for the external internet. The internet authorities has set aside three sets of addresses to be used as private addresses as shown in Table 6.2.1. It may be

noted that these addresses can be reused within different internal networks simultaneously, which in effect has helped to increase the lifespan of the IPV4. However, to make use of the concept, it is necessary to have a router to perform the operation of address translation between the private network and the internet. As shown in Fig. 6.2.8, the NAT router maintains a table with a pair of entries for private and internet address. The source address of all outgoing packets passing through the NAT router gets replaced by an internet address based on table look up. Similarly, the destination address of all incoming packets passing through the NAT router gets replaced by the corresponding private address, as shown in the figure. The NAT can use a pool of internet addresses to have internet access by a limited number of stations of the private network at a time.

Table 6.2.1 Addresses for Private Network

Range of addresses	Total number
10.0.0.0 to 10.255.255.255	2^{24}
172.16.0.0 to 172.31.255.255	2^{20}
192.168.0.0 to 192.168.255.255	2^{16}

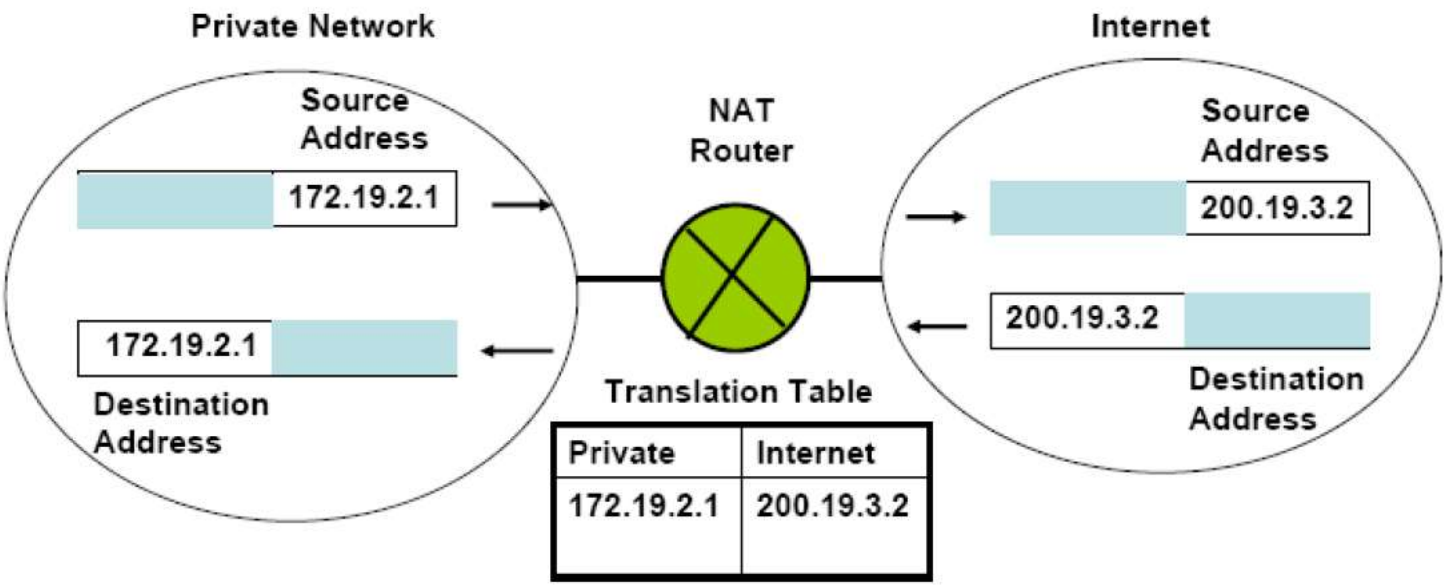

6.2.5 Address Resolution Protocol (ARP)

It may be noted that the knowledge of hosts' IP address is not sufficient for sending packets, because *data link hardware does not understand internet addresses*. For example, in an Ethernet network, the Ethernet controller card can send and receive using 48-bit Ethernet addresses. The 32-bit IP addresses are unknown to these cards. This requires a mapping of the IP addresses to the corresponding Ethernet addresses. This mapping is accomplished by using a technique known as *Address Resolution Protocol (ARP)*.

One possible approach is to have a *configuration file* somewhere in the system that maps IP addresses onto the Ethernet addresses. Although this approach is straightforward, maintaining an up-to0-date table has a high overhead on the system. Another elegant approach is to broadcast packet onto the Ethernet asking "*who owns the destination IP address*?". The destination node responds with its Ethernet address after hearing the request. This protocol of asking the question and getting the reply is called ARP (Addressing Resolution Protocol), which is widely used. ARP is a dynamic mapping approach for finding a physical address for a known IP address. It involves following two basic steps as shown in Fig. 6.2.9.

- An ARP request is broadcast to all stations in the network
- An ARP reply is an unicast to the host requesting the mapping

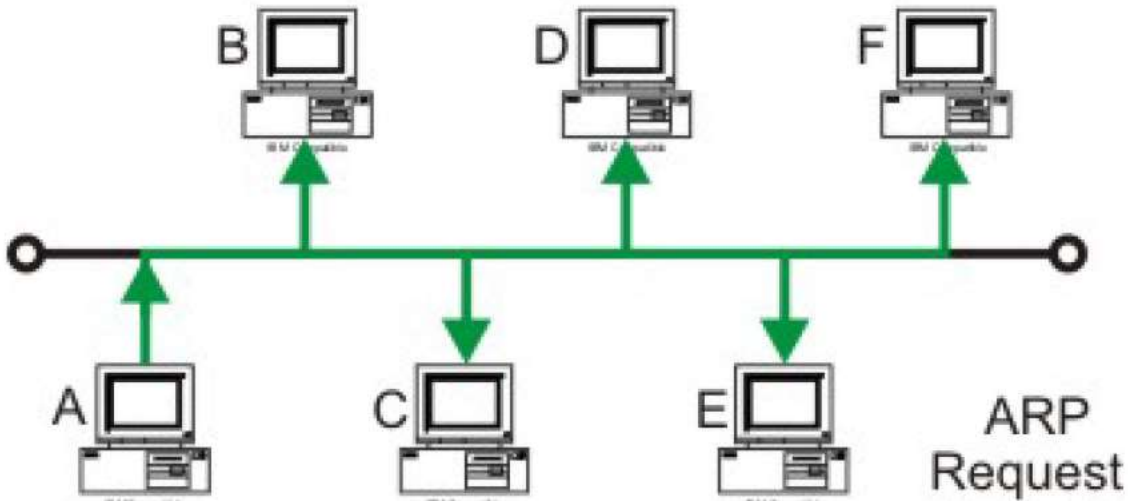

(a)

(a)

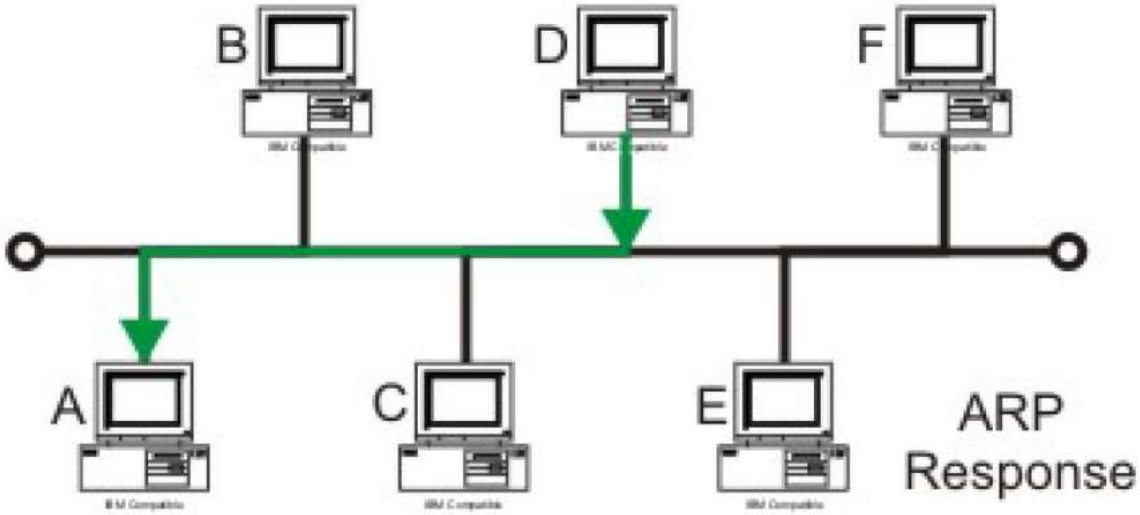

(b)

Figure 6.2.9 (a) ARP request with a broadcast to all the stations and
(b) ARP response is a unicast only to the requesting host

Various optimizations are commonly used to improve the efficiency of the ARP protocol. One possible approach is to use cache memory to hold the recently acquired frame containing the physical address. As a consequence, no broadcasting is necessary in near future. Figure 6.2.10 shows how an ARP packet is encapsulated into the data field of a MAC frame.

Reverse ARP (RARP)

The TCP/IP protocols include another related protocol known as reverse ARP, which can be used by a computer such as a diskless host to find out its own IP address. It involves the following steps:

- Diskless host A broadcasts a RARP request specifying itself as the target
- RARP server responds with the reply directly to host A
- Host A preserves the IP address in its main memory for future use until it reboots

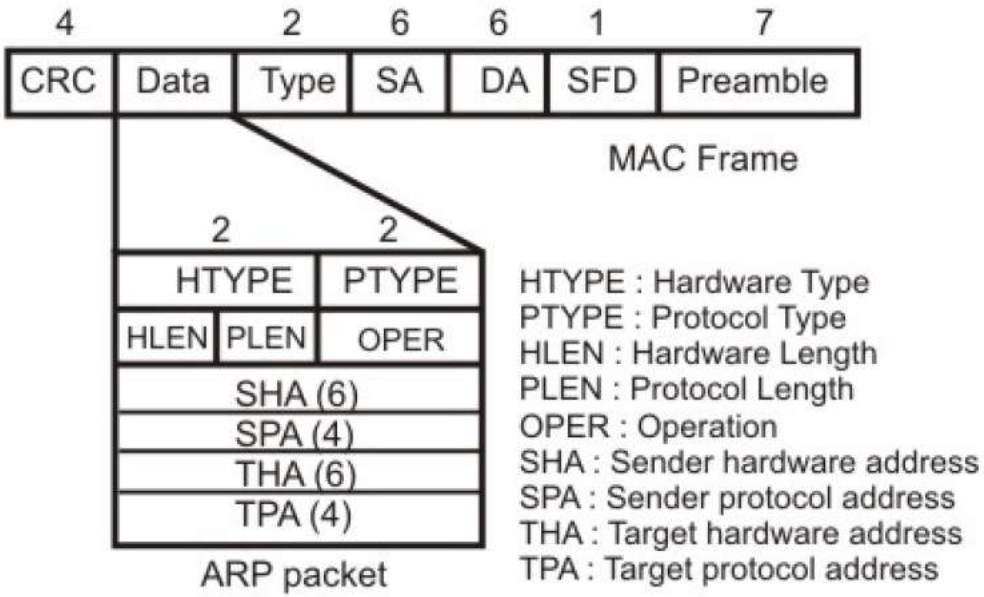

Figure 6.2.10 An ARP packet is encapsulated directly into the data field a MAC frame

DTE + DCE

Data Terminal Equipment (DTE):-

DTE is any device that functions either as a source of or as a destination for binary digital data

⇒ It can be a terminal,

- microcomputer,
- computer,
- Printer,
- fax machine or any other device that generates or consumes digital data.

DTE do not communicate directly with one another; they generate and consume information but need to be able to communicate

Intermediate device

DCE is any device that transmits or rece
data in the form of an analog or digital signal
through a network.

DTE (DCE) ∿∿ (DCE) DT
100100 100

Eg: Modulator / demodulator → Modem

o make communication possible, both the sending and receiv
CE's must use the same modulating method.

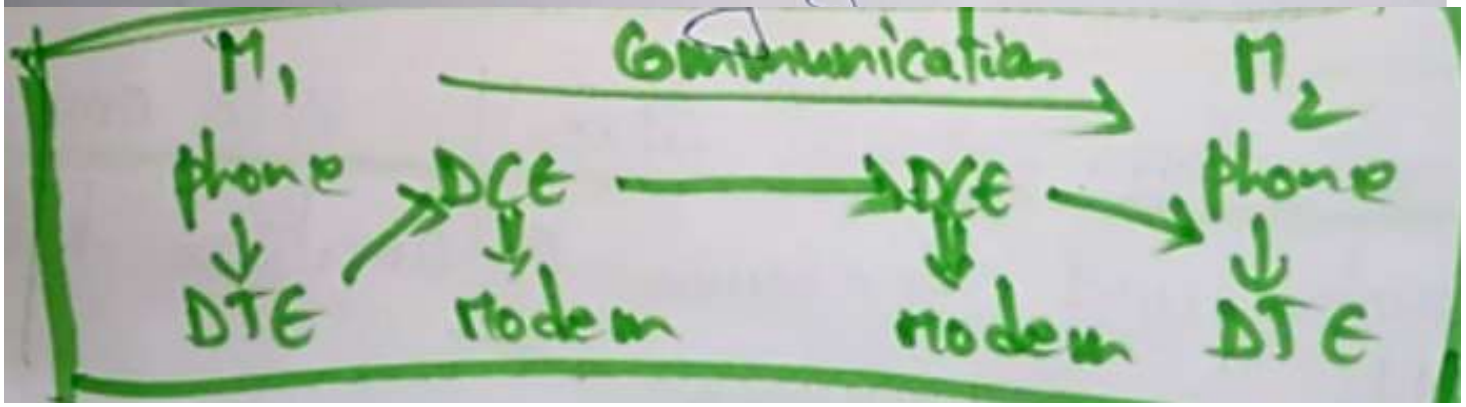

When we conduct a technical workshop, a common query from the participants relates to the Maximum Transmission Unit (MTU) size manipulation on a router interface and its relationship with the TCP Maximum Segment Size (MSS). I will try to discuss this in detail from a network engineers point of view.

The Maximum Transmission Unit (MTU) is the maximum length of data that can be transmitted by a protocol in one instance. If we take the Ethernet interface as an example, the MTU size of an Ethernet interface is 1500 bytes by default, which excludes the Ethernet frame header and trailer. It means that the interface cannot carry any frame larger then 1500 bytes. If we look inside the frame, we have a 20 byte IP header + 20 byte TCP header, leaving a 1460 byte of the payload that can be transmitted in one frame. This is what we refer to as TCP MSS. The diagram below visualizes this concept:

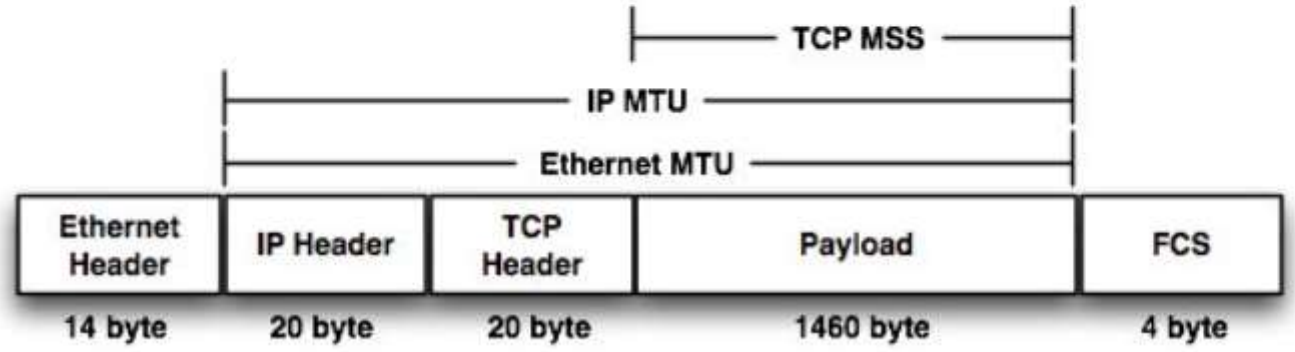

In a normal transmission case, if there is no additional encapsulation (that is, IPsec, MPLS and so forth) carried out on a transiting router, the source device may use the maximum payload length of 1460 bytes without any potential risk of packet fragmentation/drop. This is negotiated during the TCP three-way handshake stage between the source and destination host.

Now in a likely case where a router in transit is carrying out additional encapsulation, that is, MPLS label swapping, this will add an additional label header as below:

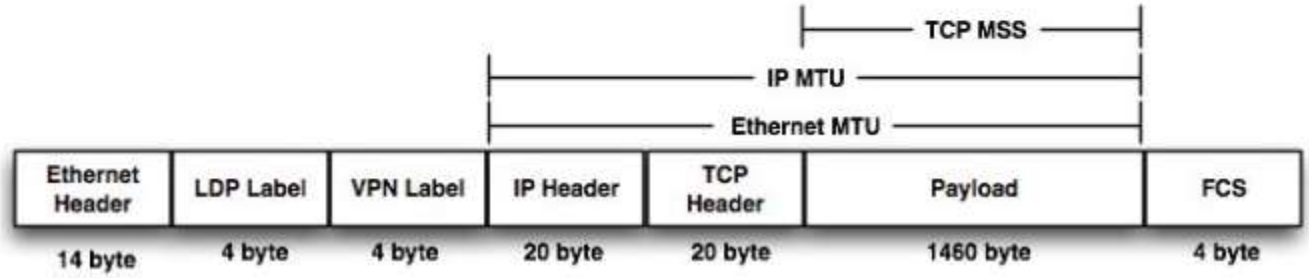

Telnet

Telnet is a simple remote terminal protocol that provides a remote log-on capability, which enables a user to log on to a remote computer and behaves as if it is directly connected to it. The following three basic services are offered by TELNET:

- It defines a network virtual terminal that provides a standard interface to remote systems
- It includes a mechanism that allows the client and server to negotiate options from a standard set
- It treats both ends symmetrically

File Transfer Protocol (FTP)

File Transfer Protocol (FTP) is a TCP/IP client-server application for transfer files between two remote machines through internet. A TCP connection is set up before file transfer and it persists throughout the session. It is possible to send more than one file before disconnecting the link. A control connection is established first with a remote host before any file can be transferred. Two connections required are shown in Fig. 6.3.15. Users view FTP as an interactive system

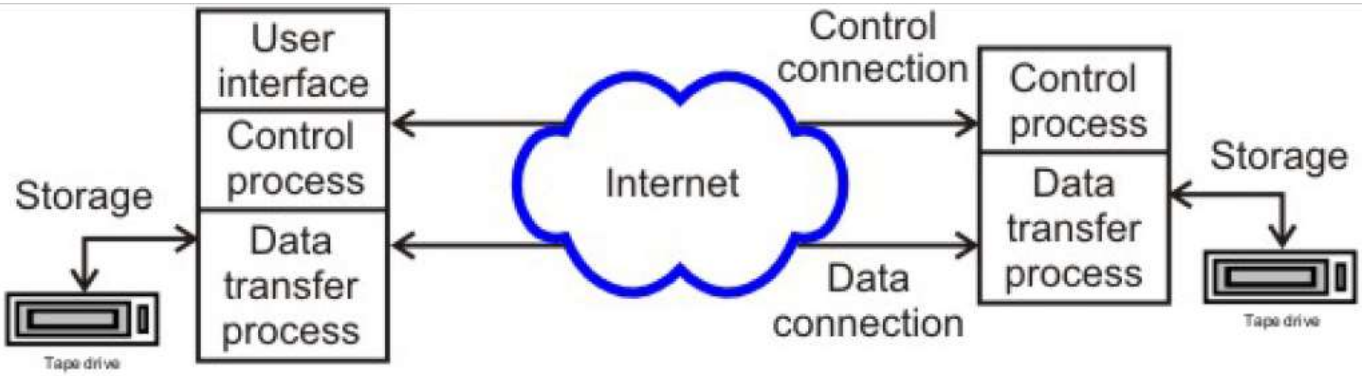

Figure 6.3.15 File Transfer Protocol (FTP)

Simple Network Management Protocol (SNMP)

Network managers use network management software that help them to locate, diagnose and rectify problems. Simple Network Management Protocol provides a systematic way for managing network resources. It uses transport layer protocol for communication. It allows them to monitor switches, routers and hosts. There are four components of the protocol:

- Management of systems
- Management of nodes; hosts, routers, switches
- Management of Information Base; specifies data items a host or a router must keep and the operations allowed on each (eight categories)
- Management of Protocol; specifies communication between network management client program a manager invokes and a network management server running on a host or router

The *maximum transmission unit* is the maximum size of a single data unit of digital communications that can be transmitted over a network. The MTU size is an inherent property of a physical network interface and is usually measured in bytes. The MTU for Ethernet, for example, is 1500 bytes. Some types of networks, such as token rings, have larger MTUs, and some networks have smaller MTUs, but the value is fixed for each physical technology.

MTU Versus Maximum TCP Packet Size

Higher-level network protocols like TCP/IP can be configured with a maximum packet size, which is a parameter independent of the physical layer MTU over which TCP/IP runs.

In Microsoft Windows, the maximum packet size for protocols such as TCP can be set in the Registry. If this value is set too low, streams of network traffic are broken up into a relatively large number of small packets, which adversely affects performance. Xbox Live, for example, requires the value of the packet size to be at least 1365 bytes. If the maximum TCP packet size is set too high, it exceeds the network's physical MTU and degrades performance by requiring that each packet be subdivided into smaller ones — a process is known as fragmentation. Microsoft Windows computers default to a maximum packet size of 1500 bytes for broadband connections and 576 bytes for dial-up connections.

In theory, the **limitation of TCP packet size is 64K (65,525 bytes).** This limit is much larger than you'll ever use because the transmission layers have much lower sizes plus protocol overhead; TCP, for example, **reserves 20 to 60 bytes** just for the header of each packet. **Ethernet's MTU of 1500 bytes** limits the size of packets that traverse it. Sending a packet that is larger than the maximum transmission window for Ethernet is called jabbering. Jabber can be identified and prevented. If unaddressed, jabbering can disrupt a network. Usually, jabber is detected by repeater hubs or network switches that are designed to do so. The simplest way to prevent jabber is to set the maximum size of a TCP packet to no more than 1500 bytes.

Performance problems may also arise if the TCP maximum transmission setting on the home broadband router differs from the setting on individual devices connected to it.

Asynchronous and Synchronous Transmission

Timing or synchronization between a sender and a receiver is very important for data transmission

Asynchronous transmission:

1) A bit stream is segmented into small groups → **character**s (5~8 **bit**s)
2) Add a **start bit** (0) and a **stop bit** (1) at the beginning and end of each character
3) **Frame** = start_bit + character + stop_bit (7~10 bits), but 2/9~2/10 no real data
4) Arbitrary long gap/interval/**idle** between two characters or frames

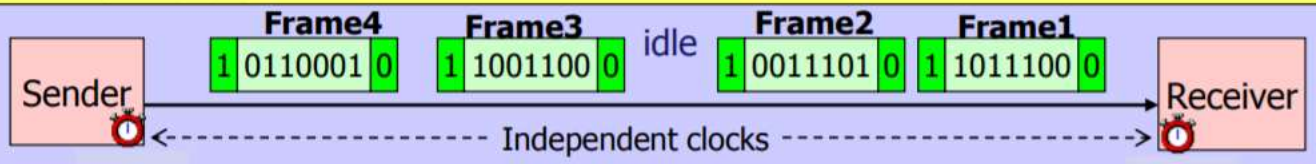

Synchronous transmission:

1) A bit stream is segmented into relative large groups/blocks→ many characters or **byte**s
2) Add **control bits** at the beginning and end of each block
3) **Frame** = H_control_bits + characters (data_bits) + T_control_bits
4) No gap/interval/idle between two characters in a data block/frame

Write short notes on the following:

(i) DNS
(ii) DNS Name Space
(iii) E-mail
(iv) WWW
(v) SNMP
(vi) HTTP
(vii) SMTP
(viii) POP Service

DNS:

DNS stands for Domain Name System which is a hierarchical naming scheme used in the Internet. Simply stated, DNS is a mapping system for the web addresses corresponding to their IP addresses. When a web address is typed in the browser, it actually sends a broadcast message to its own network asking who know the IP address corresponding to the address. The local DNS server replies back the answer with the IP address of the corresponding web address using which the host sends the actual request to the server where he wanted to communicate.

DNS Name Space:

Managing a large and constantly changing set of names is a nontrivial problem. In the postal system, name management is done by requiring letters to specify (implicitly or explicitly) the country, state or province, city, and street address of the addressee. By using this kind of hierarchical addressing, there is no confusion between the Marvin Anderson on Main St. in White Plains, N.Y. and the Marvin Anderson on Main St. in Austin, Texas. DNS works the same way.

Conceptually, the Internet is divided into over 200 top-level domains, where each domain covers many hosts. Each domain is partitioned into subdomains, and these are further partitioned, and so on. All these domains can be represented by a tree, as shown in the following figure.

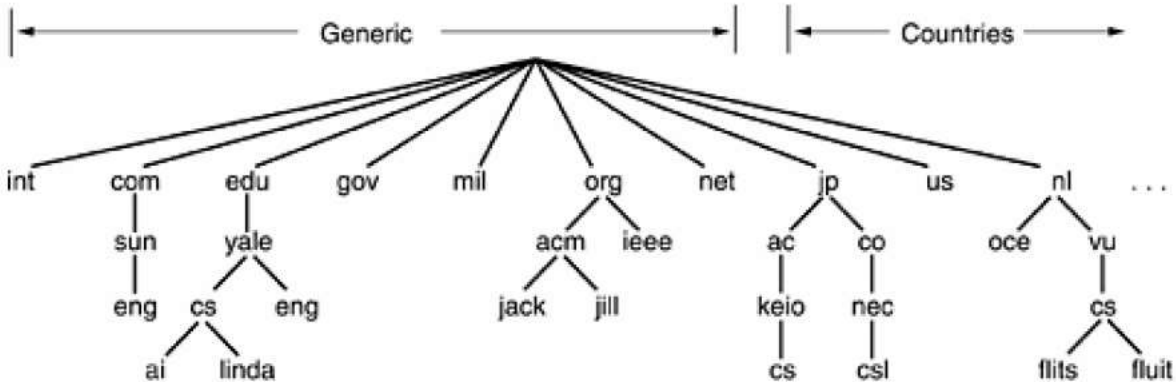

The leaves of the tree represent domains that have no subdomains (but do contain machines, of course). A leaf domain may contain a single host, or it may represent a company and contain thousands of hosts. The top-level domains come in two flavors: generic and countries.

How a resolver looks up a remote name in eight steps?

To map a name onto an IP address, an application program calls a library procedure called the resolver, passing it the name as a parameter. In the following figure, a resolver on flits.cs.vu.nl wants to know the IP address of the host linda.cs.yale.edu. In step 1, it sends a query to the local name server, cs.vu.nl. This query contains the domain name sought, the type (A) and the class (IN).

Let us suppose the local name server has never had a query for this domain before and knows nothing about it. It may ask a few other nearby name servers, but if none of them know, it sends a UDP packet to the server for edu given in its database edu-server.net. It is unlikely that this server knows the address of linda.cs.yale.edu, and probably does not know cs.yale.edu either, but it must know all of its own children, so it forwards the request to the name server for yale.edu (step 3). In turn, this one forwards the request to cs.yale.edu (step 4), which must have the authoritative resource records. Since each request is from a client to a server, the resource record requested works its way back in steps 5 through 8.

E-mail:

E-mail is an abbreviated form of electronic mail which was first designed to allow one to make a faster communication with other. An individual created a message and specified other individuals as recipients. The first design suffered from several problems as stated below.

1. Sending a message to a group of people was inconvenient. Managers often need this facility to send memos to all their subordinates.
2. Messages had no internal structure, making computer processing difficult. For example, if a forwarded message was included in the body of another message, extracting the forwarded part from the received message was difficult.
3. The originator (sender) never knew if a message arrived or not.
4. If someone was planning to be away on business for several weeks and wanted all incoming e-mail to be handled by his secretary, this was not easy to arrange.
5. The user interface was poorly integrated with the transmission system requiring users first to edit a file, then leave the editor and invoke the file transfer program.
6. It was not possible to create and send messages containing a mixture of text, drawings, facsimile, and voice.

Architectures and Services of E-mail:

An E-mail system consists of two subsystems- user agents and message transfer agents. The first subsystem allows people to read and send e-mail while the second one moves the messages from the source to the destination. The user agents are local programs that provide a command-based, menu-based, or graphical method for interacting with the e-mail system. The message transfer agents are typically system daemons, that is, processes that run in the background. Their job is to move e-mail through the system.

Functions supported by E-mail:

- Composition: process of creating messages and answers.
- Transfer refers: moving messages from the originator to the recipient.
- Reporting: telling the originator what happened (delivered/failed) to the message.
- Displaying: people should be able to see their E-mails.
- Disposition: what the recipient does with the message after receiving it.

WWW:

The World Wide Web is an architectural framework for accessing linked documents spread out over millions of machines all over the Internet. From the users' point of view, the Web consists of a vast, worldwide collection of documents or Web pages, often just called pages for short. Each page may contain links to other pages anywhere in the world. Users can follow a link by clicking on it, which then takes them to the page pointed to. This process can be repeated indefinitely. The idea of having one page point to another, now called hypertext. Pages are viewed with a program called a browser, of which Internet Explorer and Netscape Navigator are two popular ones. The browser fetches the page requested, interprets the text and formatting commands on it, and displays the page, properly formatted, on the screen.

 # Basic Model of WWW:

Here the browser is displaying a Web page on the client machine. When the user clicks on a line of text that is linked to a page on the abcd.com server, the browser follows the hyperlink by sending a message to the abcd.com server asking it for the page. When the page arrives, it is displayed. If this page contains a hyperlink to a page on the xyz.com server that is clicked on, the browser then sends a request to that machine for the page, and so on indefinitely.

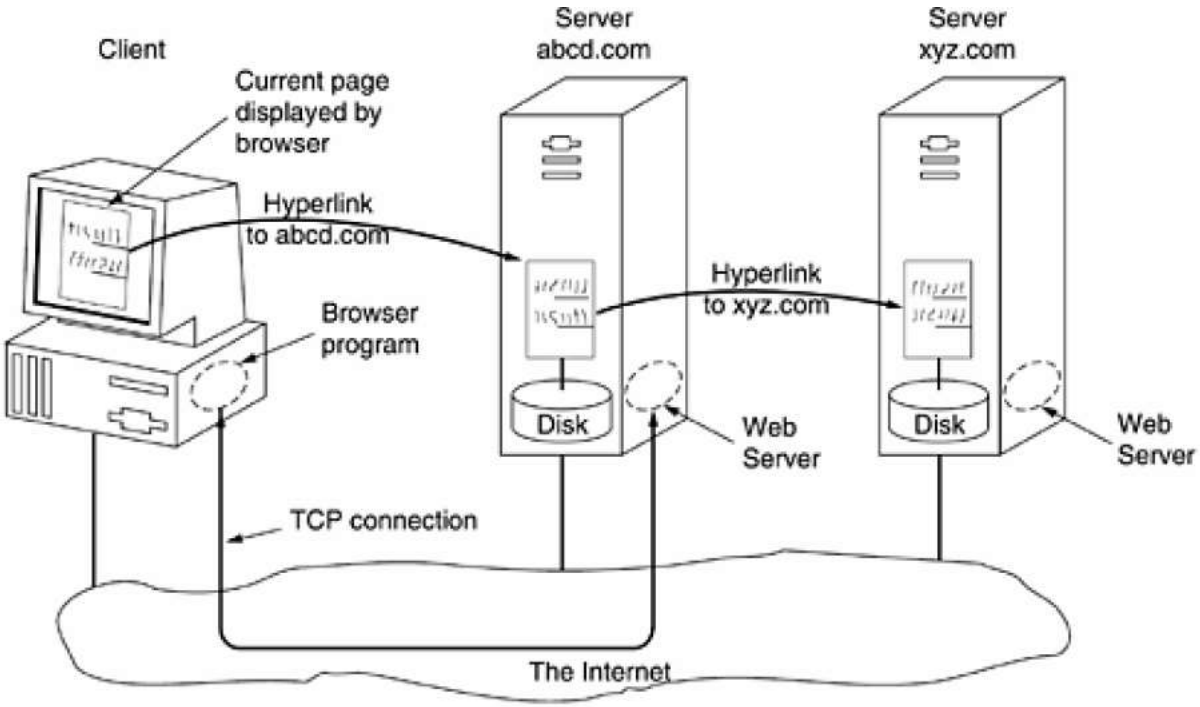
Client
Current page displayed by browser
Hyperlink to abcd.com
Browser program
Server abcd.com
Disk
Web Server
Hyperlink to xyz.com
Server xyz.com
Disk
Web Server
TCP connection
The Internet

URL:

When the Web was first created, it was immediately apparent that having one page point to another Web page required mechanisms for naming and locating pages. In particular, three questions had to be answered before a selected page could be displayed:

- What is the page called?
- Where is the page located?
- How can the page be accessed?

If every page were somehow assigned a unique name, there would not be any ambiguity in identifying pages. Nevertheless, the problem would not be solved. The solution chosen identifies pages in a way that solves all three problems at once. Each page is assigned a URL (Uniform Resource Locator) that effectively serves as the page's worldwide name. URLs have three parts:

- the protocol (also known as the scheme)
- the DNS name of the machine on which the page is located
- a local name uniquely indicating the specific page (usually just a file name on the machine where it resides).

For example: http://www.youtube.com/video=12A7dHorn.html is a URL.

HTTP:

The transfer protocol used throughout the World Wide Web is HTTP (HyperText Transfer Protocol). It specifies what messages clients may send to servers and what responses they get back in return. That is, HTTP helps to send different types of requests and receives the responses.

The following figure shows several HTTP request methods.

Method	Description
GET	Request to read a Web page
HEAD	Request to read a Web page's header
PUT	Request to store a Web page
POST	Append to a named resource (e.g., a Web page)
DELETE	Remove the Web page
TRACE	Echo the incoming request
CONNECT	Reserved for future use
OPTIONS	Query certain options

SNMP:

The simple protocol used to manage an internet is known as the Simple Network Management Protocol (SNMP). The SNMP defines exactly how a manger communicates with an agent. For example, SNMP defines that formats of requests that a manager sends to an agent and the format of replies that an agent returns. In addition, SNMP defines the exact meaning of each possible request and reply.

SMTP:

An e-mail is delivered by having the source machine establish a TCP connection to port 25 of the destination machine. Listening to this port is an e-mail daemon that speaks SMTP (Simple Mail Transfer Protocol). This daemon accepts incoming connections and copies messages from them into the appropriate mailboxes. If a message cannot be delivered, an error report containing the first part of the undeliverable message is returned to the sender. SMTP is a simple ASCII protocol. After establishing the TCP connection to port 25, the sending machine, operating as the client, waits for the receiving machine, operating as the server, to talk first. The server starts by sending a line of text giving its identity and telling whether it is prepared to receive mail. If it is not, the client releases the connection and tries again later. If the server is willing to accept e-mail, the client announces whom the e-mail is coming from and whom it is going to. If such a recipient exists at the destination, the server gives the client the go-ahead to send the message. Then the client sends the message and the server acknowledges it. No checksums are needed because TCP provides a reliable byte stream.

POP Service:

POP stands for Post Office Protocol which is a solution to the problem of how does the user get the e-mail from the ISP's message transfer agent? allows user transfer agents (on client PCs) to contact the message transfer agent (on the ISP's machine) and allow e-mail to be copied from the ISP to the user. The situation that used to hold (both sender and receiver having a permanent connection to the Internet) is illustrated in Fig(a). A situation in which the sender is (currently) on-line but the receiver is not is illustrated in Fig(b).

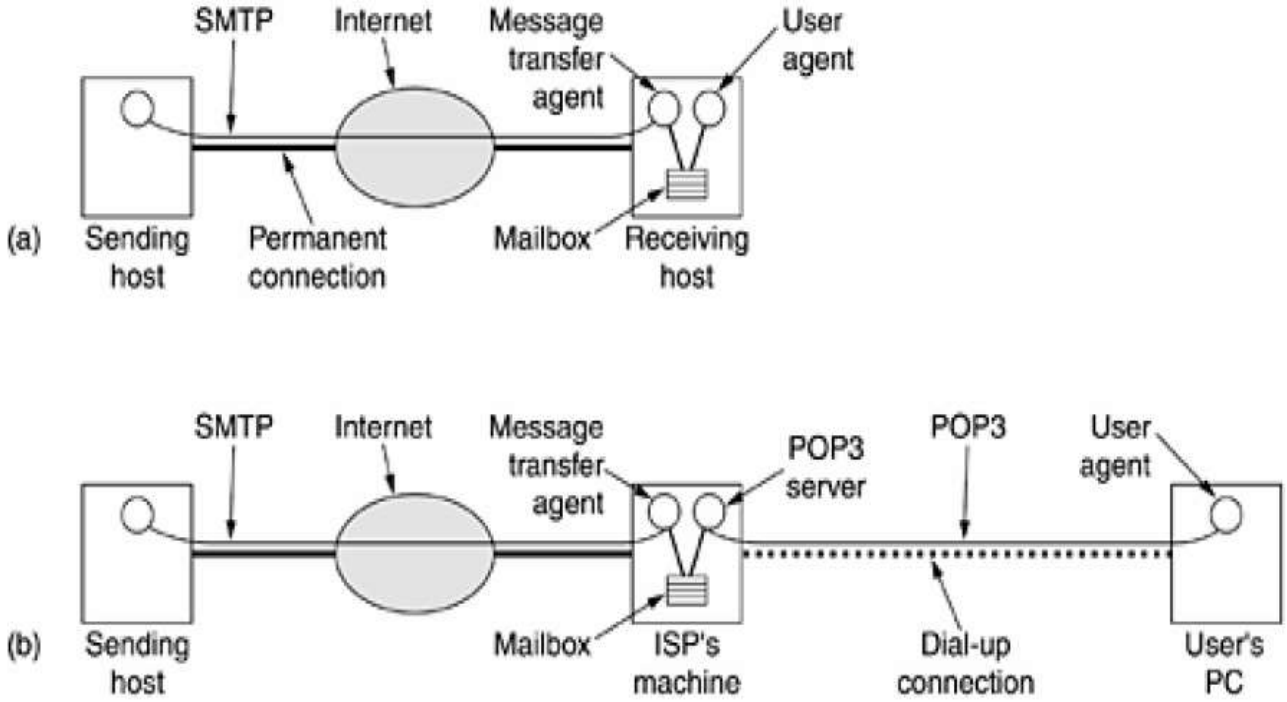

POP begins when the user starts the mail reader. The mail reader calls up the ISP (unless there is already a connection) and establishes a TCP connection with the message transfer agent at port 110. Once the connection has been established, the POP protocol goes through three states in sequence: authorization, transaction, update.

What is network security? Why do we need network security?

Network Security:

Network security is concerned with making sure that nosy people cannot read, or worse yet, secretly modify messages intended for other recipients. It is concerned with people trying to access remote services that they are not authorized to use.

Need for Security:

We need network security for various issues. Many people try to break the security of a system for various purposes as shown in the following table. In order to keep such intruders away from the system and to keep the system stable, we need network security.

Adversary	Goal
Student	To have fun snooping on people's e-mail
Cracker	To test out someone's security system; steal data
Sales rep	To claim to represent all of Europe, not just Andorra
Businessman	To discover a competitor's strategic marketing plan
Ex-employee	To get revenge for being fired

What are the components of network security?

Network security problems can be divided roughly into four closely intertwined areas.

- Secrecy
- Authentication
- Nonrepudiation
- Integrity control.

Secrecy, also called confidentiality, has to do with keeping information out of the hands of unauthorized users. This is what usually comes to mind when people think about network security.

Authentication deals with determining whom you are talking to before revealing sensitive information or entering into a business deal.

Define Cryptography and differentiate between *cipher* and *code*. Design an encryption model for a symmetric key cipher.

 # Cryptography:

Simply stated, cryptography is the technique of secret writing.

 # Difference between cipher and code:

A cipher is a character-for-character or bit-for-bit transformation, without regard to the linguistic structure of the message. For example, replacing a page of text by some sort of characters for every character of the text is making the text cipher. Here, meaning of text is not important.

In contrast, a code replaces one word with another word or symbol. The meaning if the text is important here.

What is block ciphers? Explain the design principle of block ciphers.

Block cipher is a symmetric key cryptographic algorithm which takes an n-bit block of plaintext as input and transforms it using the key into n-bit block of ciphertext.

Block cipher working on the principle of confusion (substitution) and diffusion (transposition-permutation). We know that the cryptographic algorithms can be implemented in either hardware (for speed) or in software (for flexibility). Transpositions and substitutions can be implemented with simple electrical circuits.

A P-box (P stands for permutation) is used to effect a transposition on an 8-bit input. If the 8 bits are designated from top to bottom as 01234567, the output of this particular P-box is 36071245.

Substitutions are performed by S-boxes as shown below. Changing the wiring inside the box, any substitution can be performed. A 3 bit plaintext is given as input and a 3 bit ciphertext is obtained as output.

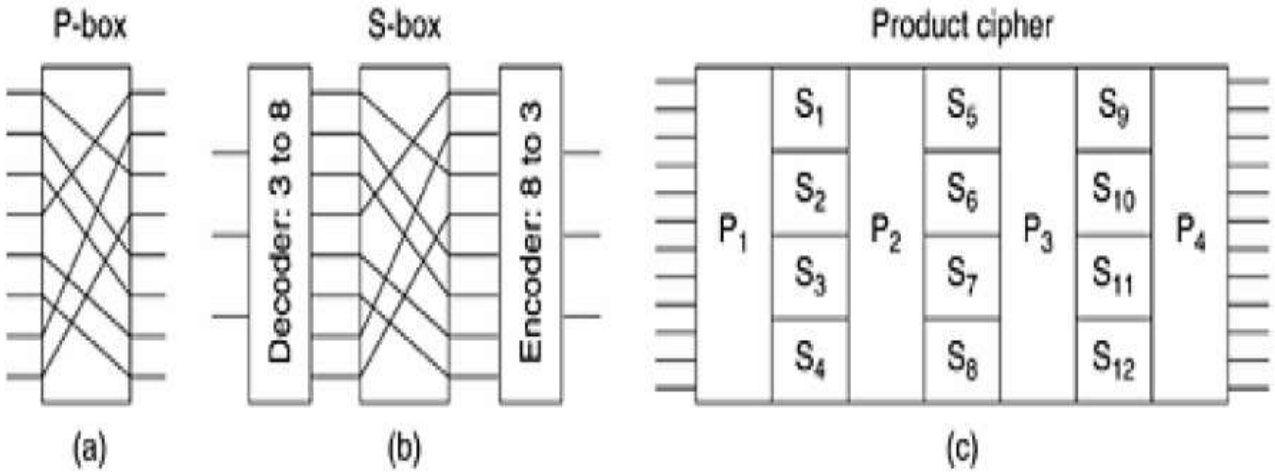

The real power of the block cipher is apparent when we cascaded the P and S boxes. It is completely made by hardware and is really speedy since no computation is required.

What is Transport Protocol Data Unit (TPDU)? Describe the nesting of TPDUs, packets and frames with necessary sketch.

 # Transport Protocol Data Unit:

The Transport Protocol Data Unit is the form of the message at transport layer. It contains the original message and a TPDU header which basically contains the port number of the relevant data. The original message is kept in the TPDU payload field. The TPDU is also called segments sometimes.

In the network layer the TPDU is then contained within a packet and a packet contains packet header and packet payload. The packet payload contains the TPDU and packet header contains the source and destination IPs.

In the data link layer the packet is contained within a frame which also consists of two parts- header and payload. The payload part contains a packet and payload header contains the source MAC address and the immediate destination MAC address. These nesting are shown by the following figure.

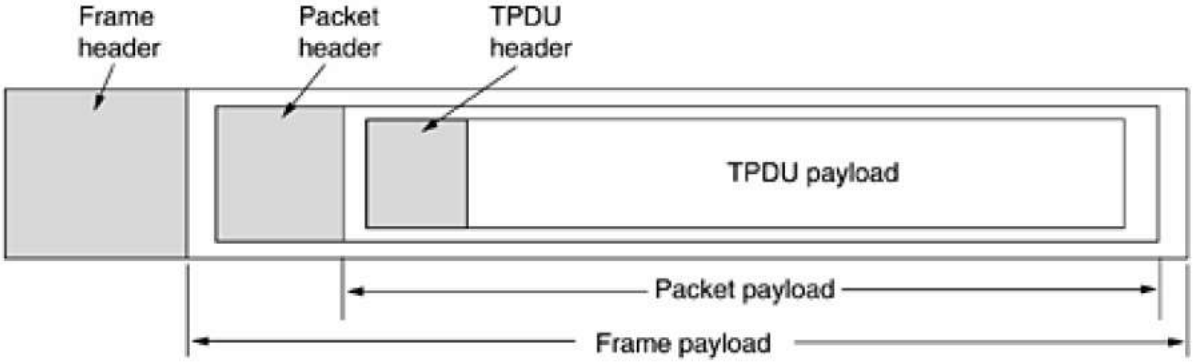

Define Socket Number and Port Number.

Port Number:

Each software uses an identification number which is called the port number. A port number consists of 16 bits. Port numbers below 1024 are called well-known ports and are reserved for standard services. Others are left for user defined applications. The following table shows some of the popular port numbers.

Port	Protocol	Use
21	FTP	File transfer
23	Telnet	Remote login
25	SMTP	E-mail
69	TFTP	Trivial file transfer protocol
79	Finger	Lookup information about a user
80	HTTP	World Wide Web
110	POP-3	Remote e-mail access
119	NNTP	USENET news

Socket number:

Socket number is defined as the IP with port number added to it.

Q: What is network address & broadcast address? Find this in 160.32.100.131/27

A: Network address refers to the network itself and not to the host computers attached to it.

When all the host bits are 1 in an IP, it is referred as broadcast address.

Now,

160.32.100.131/27 means.

$$\underbrace{10100000}_{8}.\underbrace{00100000}_{8}.\underbrace{01100100}_{8}.\underbrace{1000\,0011}_{8}$$

Host bits

Make all host bits 0 find it as broad network address.

10100000. 00100000. 01100100. 10000000

= 160.32.100.128

So, Broadcast address is making all host bits 1.

10100000. 00100000. 01100100. 10011111.

= 160.32.100.159.

1. Ipv4 address is 192.168.35.1/24 what will be the equivanet ipv6 address?

2. Main features of ipv6 header formats+fields description

3. IPV6 extension header and IPv6 tunneling. Define them.

4. How QoS can be ensured.

5. Different types of wireless MAC protocols compare.

6. What is TCP fast retransmission

7. Ip address is 192.168.121.121 and subnet mask is 255.255.248.0

Find network address, broadcast address, maximum no of host that can can be connected first usable and last usable ip address

8. Why port number is used?

9. Why UDP is useful

9. Compare ethernet frame format types

10 Compare 802.3 with 802.5, 802.4

11. Difference between segmentation and multiplexing, packet and frame, error detection and error correction.

12.Taxonomy of different WAN technologies.

13. Significance of ATM

14. Short note on cloud computing, IoT, distributed computing, sensor network, encryption and decryption

15. What is binary exponential backoff. Differ CSMA/CD with CSMA/CA

16. Compare copper wire with fiber optic

17. Short note on DSL and FDDI